Boiler Safety Valves
DN 15

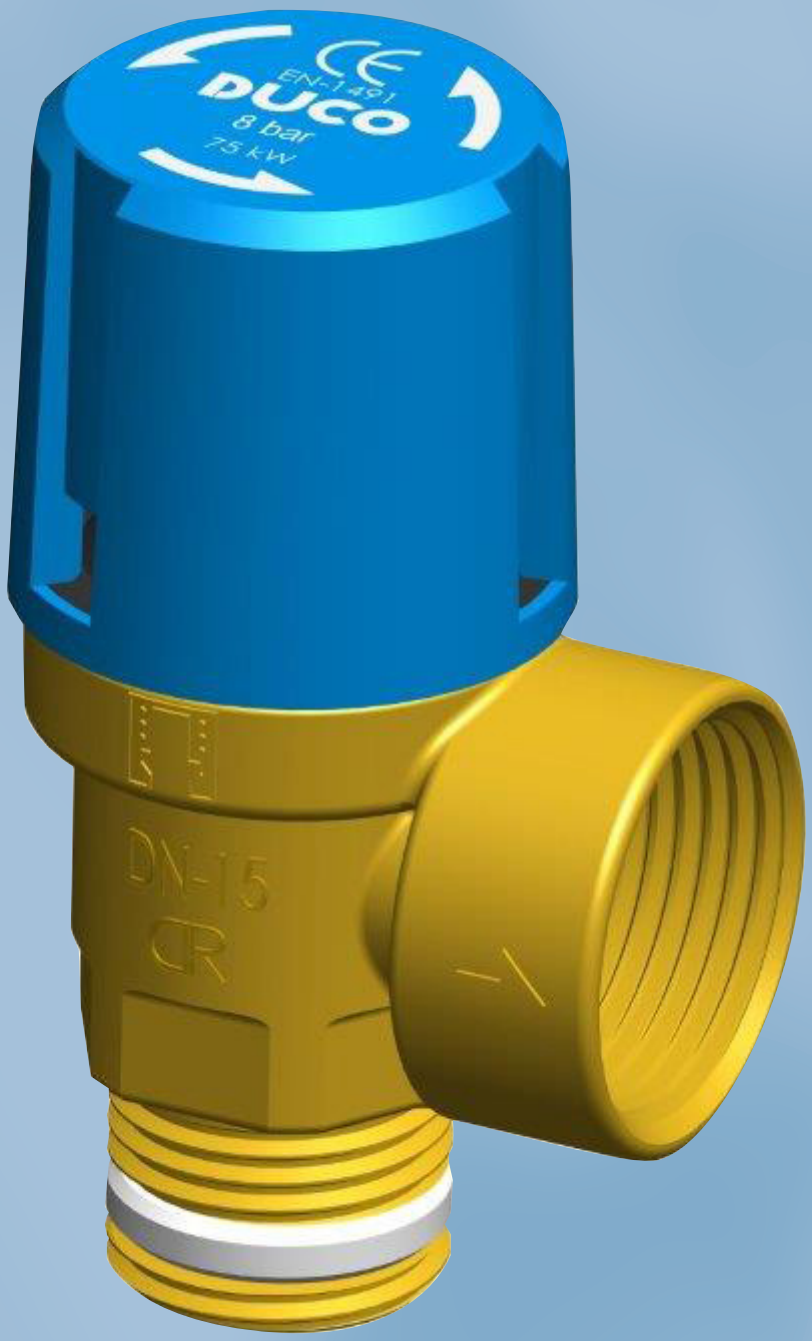

kiwa certified
ISO 9001

CE

DUCO

Boiler Safety Valves
½ x ¾" KEB-PTFE

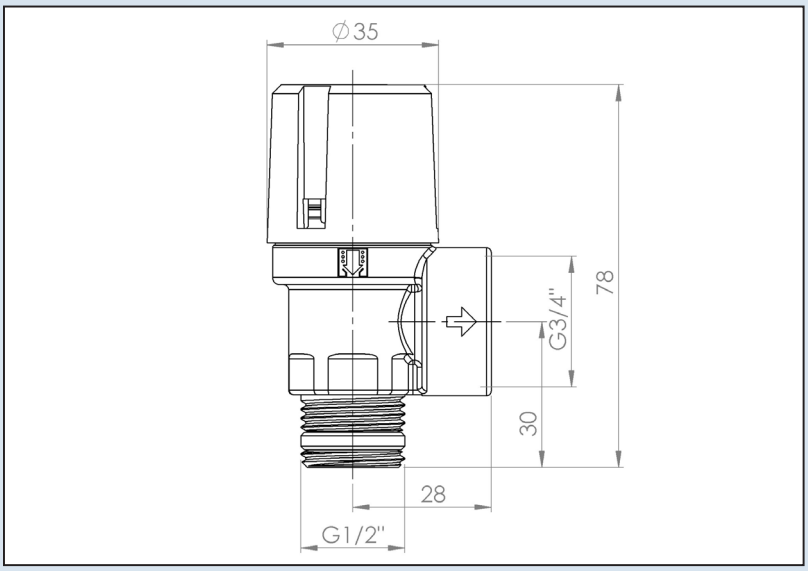

DUCO boilervalves to protect closed potable heated water systems against excessive pressure.

Application
The boiler valve has to be used in a closed drinking water system.
Only use the valve in a dry and frostfree location.
Min/Max. system temp. 0°C / + 95°C

Safety
Check whether the max. capacity and the opening pressure that are indicated on the valve match the values of the system.

Code	*Set pressure (bar)*	*Heating capacity (kW)*
1056-0-76-11	*6*	*75*
1056-0-78-11	*8*	*75*
1056-0-80-11	*10*	*75*

All Duco safety valves meet the requirements of the Pressure Equipment Directive (PED)
"Directive 2014/68/EU Module B/Module D"
The quality system also complies with the NEN-EN-ISO 9001

NORM: NEN-EN 1491

PenTec bv
Edisonweg 7
3442 AC Woerden
The Netherlands

Tel. +31 (0)182 503 100
E-mail info@pentecbv.nl
Internet www.duco.nl
www.pentecbv.nl